Mighty SPS Rack CX-37

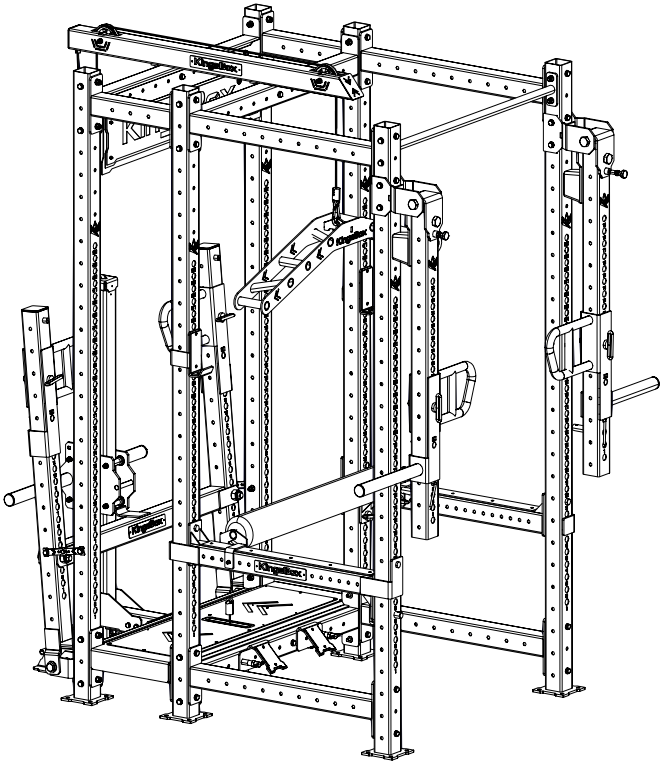

KingsBox

ATTENZIONE!
Se la struttura non viene fissata a terra e/o al muro, puo' rib-altarsi e/o provocare danni a persone o oggetti in immediata vicinnanza.

I bulloni per il fissaggio del rig a muro e/o al pavimento non sono inclusi nel pacco, in quanto per diversi tipi di muro 7 pavi-men-tazione bisogna utilizzare diversi tipi di bulloni d'ancoraggio.

OPOZORILO!
Če se struktura prevrne, lahko pride do resnih telesnih poškodb. Da bi preprečili nevarnost, da se ta struktura prevrne, mora biti pritrjena na steno in / ali v tla.

Vijaki za pritrjevanje strukture na steno oz. tla niso priloženi, saj različne sestave zidov oz. tal zahtevajo različne vrste pritrdilnih elementov. Uporabite take, ki ustrezajo sestavi vaše stene oz. tal.

WARNING!
If the structure is not secured to the ground and / or to the wall, it may overturn and / or cause damage to person or object in the immediate vicinity.

The fixing bolts for wall and / or floor are not included in the pack-age, since different types of anchor bolts must be used for dif-fer-ent wall / floor types.

Assembly elements:

SAMPLE picture	
position	QTY.
part name	

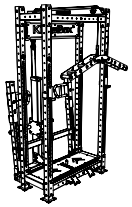	
position: 1	Asm
Mighty SPS Base	

position: 2	2x
Upright CX Mighty 2500	

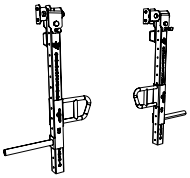	
position: 3	Asm
Mighty Jammer Arms	

position: 4	1x
PU Bar S 1100	

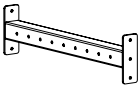	
position: 5	4x
Linked Profile 900F	

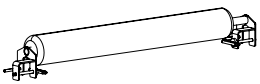	
position: 6	Asm
Mighty QF Leg Holder	

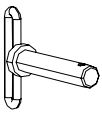	
position: 7	2x
Pin Bolt fi 25	

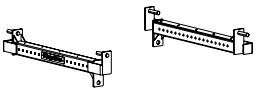	
position: 8	Asm
Mighty Safety Catcher 900	

Assembly elements:

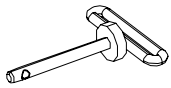

position: 9	2x
Pin Bolt fi 12	

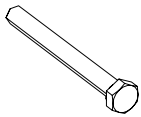

positon: 10	12x
M12x110	

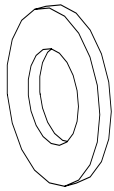

position: 11	24x
M12 Washer	

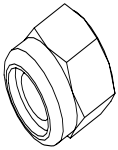

position: 12	2X
M12 Nuts	

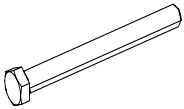

position: 13	12x
M12 Nuts	

Assembly instruction:

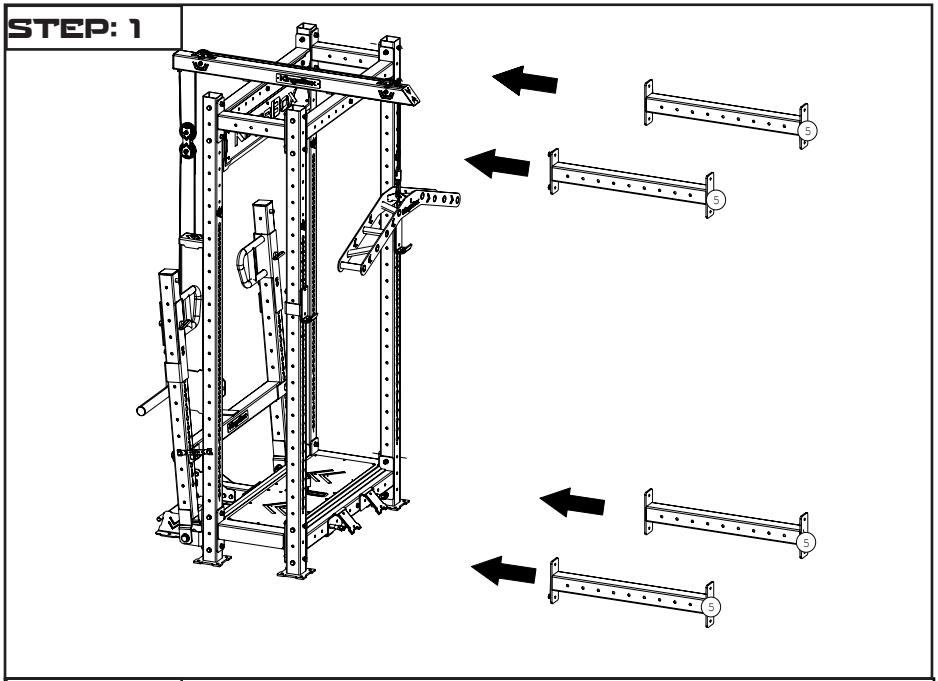

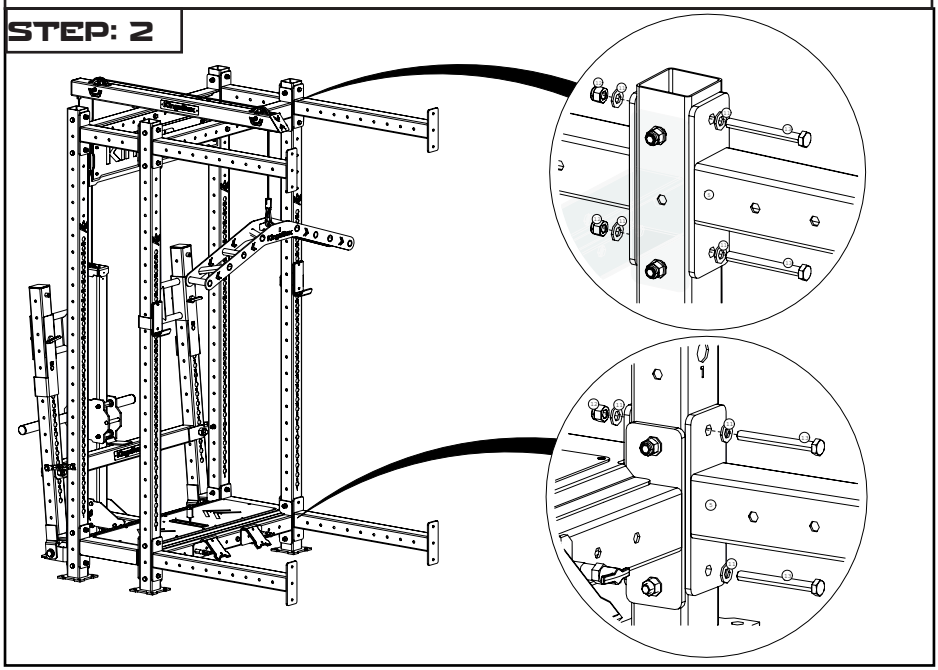

Assembly instruction:

STEP: 3

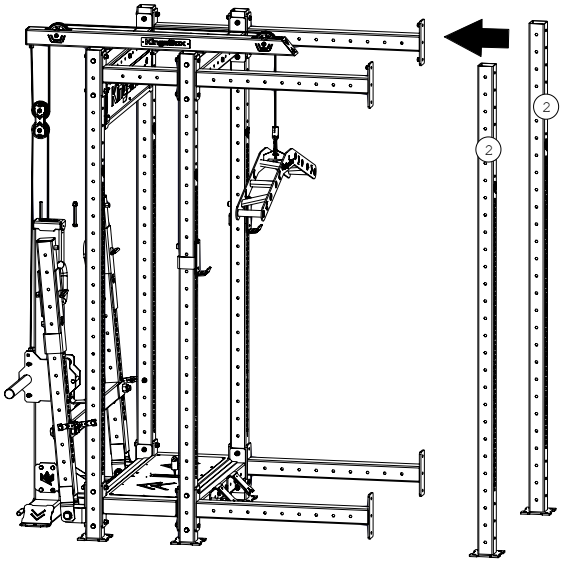

STEP: 4

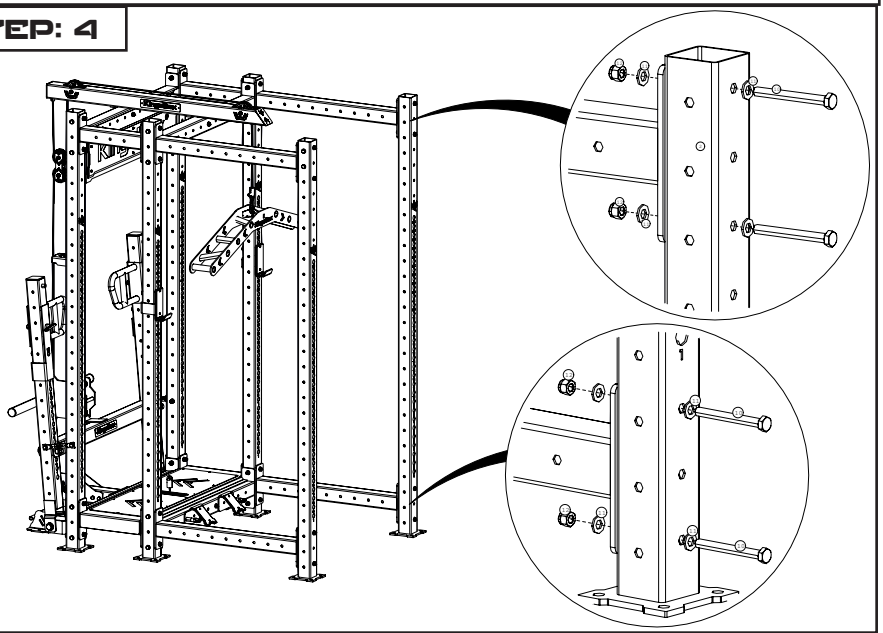

Assembly instruction:

STEP: 5

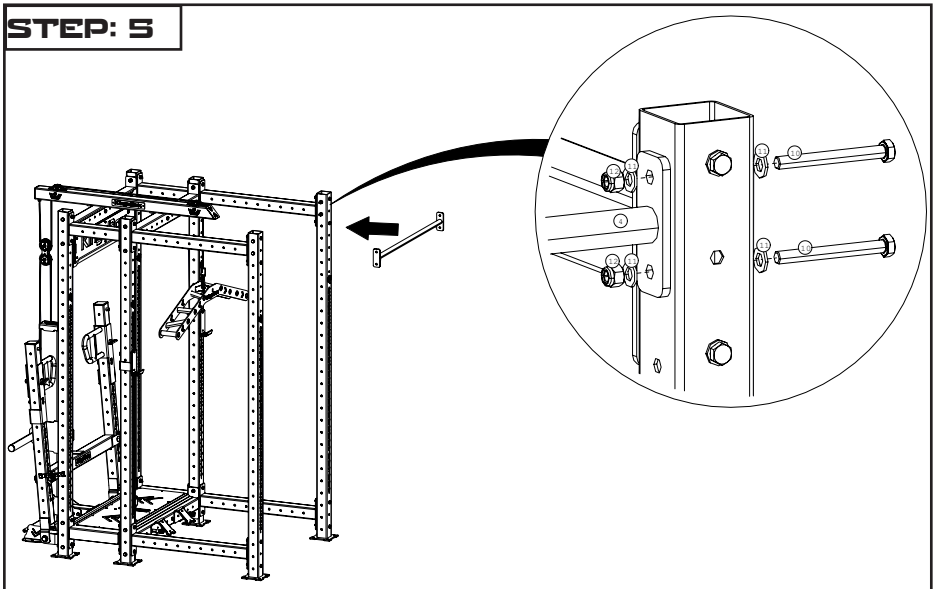

STEP: 6

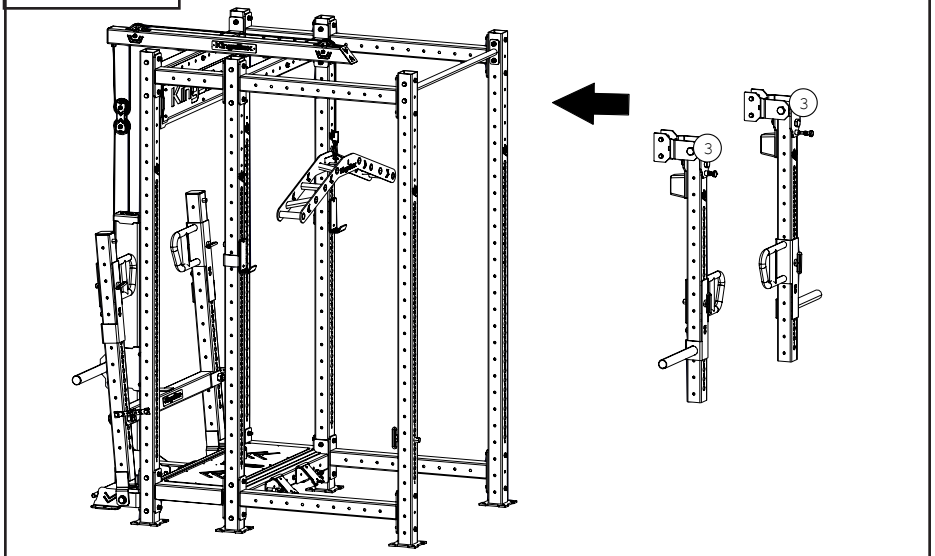
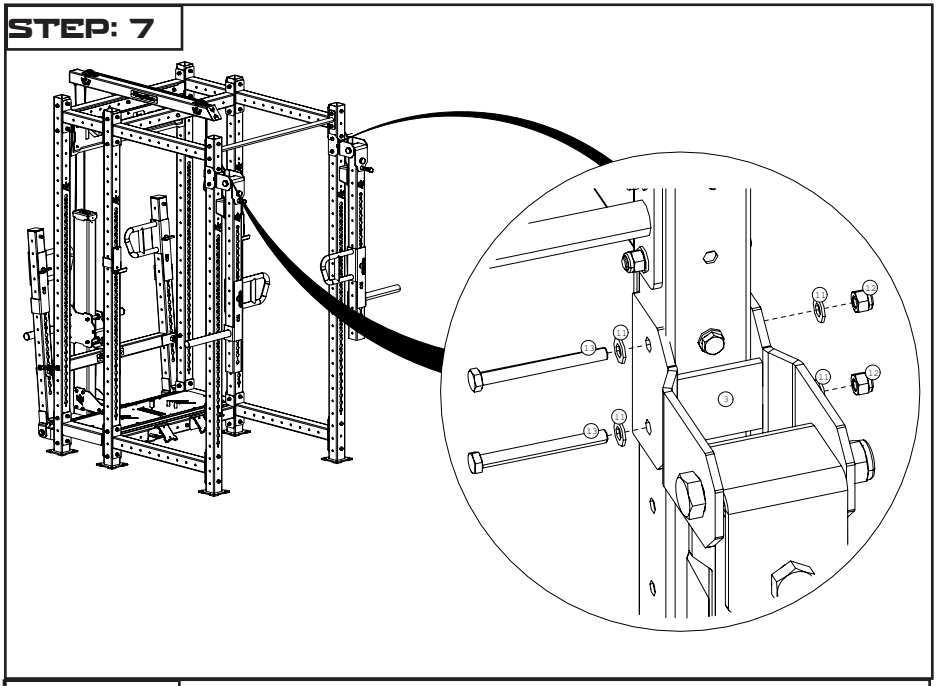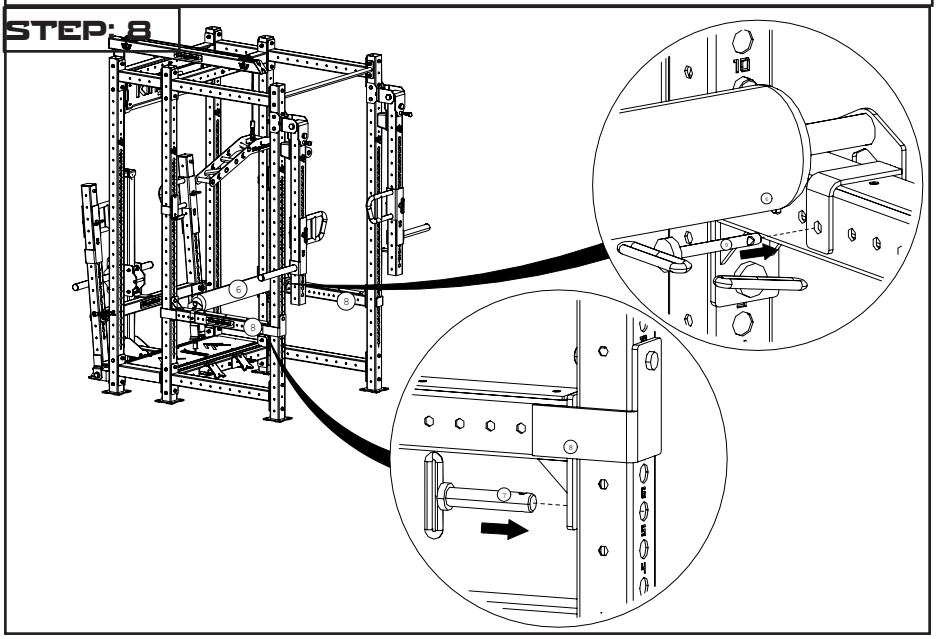
Assembly instruction: